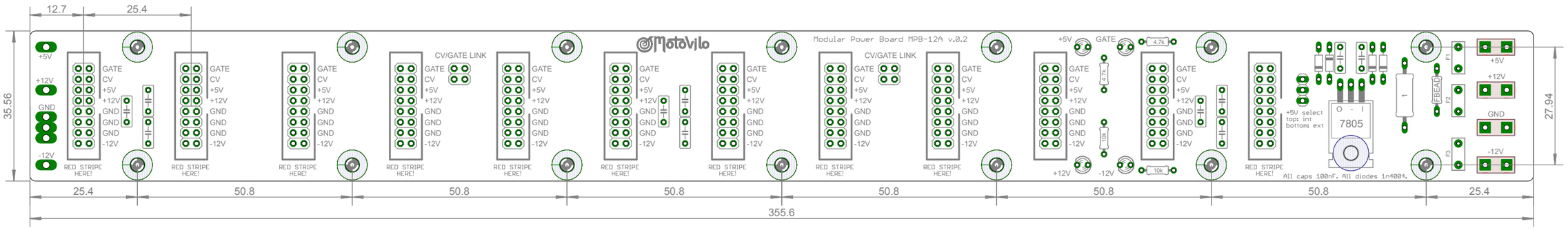
Modular Power Board MPB-12A v.0.2
Motovilo
CV/GATE LINK
GATE
CV
+5V
+12V
GND
-12V
RED STRIPE HERE!
+5V
+12V
GND
-12V
4.7k
10k
+5V select
top: int
bottom: ext
7805
FBEAD
F1
F2
F3
F4
All caps 100nF. All diodes 1n4004.
12.7
25.4
50.8
355.6
35.56
27.94